THS626

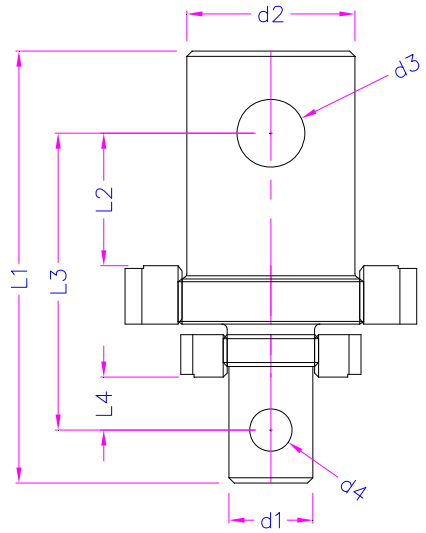



Item no:	d1	d2	d3	d4	L1	L2	L3	L4	Material	Stock-status
THS626-625-158	6	15.8	8	2.5	48	10	32	6	Alu	In stock
THS626-8-10	8	10	4	3	40	6	26	6	Alu	In stock
THS626-8-12	8	12	6	3	47	9	33	6	Alu	In stock
THS626-8-127	8	12.7	5	3	42	8	36	5	Alu	In stock
THS626-8-15-MTS	8	15	6	3	60	15	39	6	Alu	In stock
THS626-8-15864	8	15.8	6.4	3	49.5	10	33.5	6	Alu	In stock
THS626-8-15864	8	15.8	6.4	3	48	10	32	6	Alu	In stock
THS626-8-1665	8	16	6.5	3	51	12	35	6	Alu	In stock
THS626-8-25	8	25	10	3	59.5	14	39.5	6	Alu	In stock
THS626-8-3014-MTS	8	30	14	3	78	15	42	6	Alu	In stock
THS626-8-317	8	31.7	12.8	3	74	25	52.5	5	Alu	In stock
THS626-10-158	10	15.8	8	4	48	10	33	6	SST	In stock
THS626-10-158	10	15.8	8	4	48	10	33	6	Steel Ni	-
THS626-10_L18-158	10	15.8	8	4	54	10	36	9	Steel Ni	-
THS626-12-158	12	15.8	8	6	56.6	10	38.6	9	Steel Ni	In stock
THS626-12-158-L57	12	15.8	8	6	57	10	39	9	Steel Ni	In stock
THS626-127-158	12.7	15.8	8	6	56.5	10	38.5	11	Steel Ni	-
THS626-127_5-158	12.7	15.8	8	5	55	10	38	8	Steel Ni	In stock
THS626-15_6-158	15	15.8	8	6	68	15	43	10	Steel Ni	In stock
THS626-158_65-158_8	15.8	15.8	8	6.5	59	10	39	10	Steel Ni	In stock
THS626-158-158	15.8	15.8	8	8	58	10	38	10	Steel Ni	In stock
THS626-158-16	15.8	16	6.5	8	60	12	40	10	Steel Ni	In stock
THS626-158-20	15.8	20	8	8	61	10	41	10	Steel Ni	In stock
THS626-158-20_10-MTSE	15.8	20	10	8	71	15	46	10	Steel Ni	In stock
THS626-158-25	15.8	25	10	8	72	14	47	10	Steel Ni	In stock
THS626-158-29.3	15.8	29.3	12.9	8	75.1	16	49.1	10	Steel Ni	-

THS626-158-30	15.8	30	12	8	73.7	15	47.1	10	Steel Ni	In stock
THS626-158-30_12-L42.6	15.8	30	12	8	83.6	25	57	10	Steel Ni	-
THS626-158-3014	15.8	30	14	8	86.5	15	46.5	10	Steel NI	In stock
THS626-158-317	15.8	31.7	12.8	8	81.5	25	56	10	Alu	In stock
THS626-158-317	15.8	31.7	12.8	8	82.5	25	57	10	Steel NI	In stock
THS626-158-34	15.8	34	16	8	77	18	50	10	Steel Ni	In stock
THS626-158-34.8	15.8	34.8	13	8	83	20	52.5	10	Steel Ni	-
THS626-158-35	15.8	35	13	8	83	20	53	10	Steel Ni	In stock
THS626-158-35	15.8	35	13	8	78	20	52	10	Steel Ni	In stock
THS626-158-4018	15.8	40	18	8	95	25	60	10	Steel Ni	In stock
THS626-158-4520	15.8	45	20	8	106	35	71	10	Steel Ni	In stock
THS626-158-50_175	15.8	50	17.5	8	95	27.5	60	10	Steel Ni	In stock
THS626-158-603035	15.8	60	30	8	117	36	71	10	Steel Ni	-
THS626-158-70	15.8	70	35	8	143	50	88	10	Steel Ni	In stock
THS626-158-70-L137	15.8	70	35	8	137	50	84	10	Steel Ni	In stock
THS626-1665-20	16	20	8	6.5	63	10	43	10	Steel Ni	In stock
THS626-1665-317	16	31.7	12.8	6.5	86.5	25	28	12	Steel Ni	In stock
THS626-20-25	20	25	10	8	74	14	50	12	Steel Ni	In stock
THS626-20_10E-317-MTSE	20	31.7	12.8	10	97	25	66.5	16	Steel Ni	In stock
THS626-20-317	20	31.7	12.8	8	85.5	25	60	10	Steel Ni	In stock
THS626-20-317-L83.5	20	31.7	12.8	8	83.5	25	58	10	Steel Ni	In stock
THS626-20-35	20	35	13	8	86	20	56	10	Steel Ni	In stock
THS626-25-317	25	31.7	12.8	10	92.5	25	63	14	Steel Ni	In stock
THS626-293-317	29.3	31.7	12.9	12.9	92	17	58	16	Steel Ni	In stock
THS626-3014-317	30	31.7	12.8	14	94.8	25	62.7	15	Steel Ni	In stock
THS626-30_12-317	30	31.7	12.8	12	96	25	65.5	15	Steel Ni	In stock
THS626-50-M-30	30	50	17.5	12	98	25	57	16	Steel Ni	In stock
THS626-317-317-42HRC	31.7	31.7	12.8	12.8	109	25	78	25	Steel NI	In stock
THS626-317-317-V2a	31.7	31.7	12.9	12.8	95.5	25	64.5	25	SST	In stock
THS626-317-33.9	31.7	33.9	16	12.8	104	19	71.7	25	Steel Ni	-
THS626-317-34-HRC	31.7	34	16	12.7	103.5	20	72	25	Steel Ni	In stock
THS626-317-35_13-HRC	31.7	35	13	12.7	104.5	20	69	25	Steel Ni	In stock
THS626-317-3618-HRC	31.7	36	18	12.8	103.5	20	70	25	Steel Ni	In stock
THS626-317-4016-HRC	31.7	40	16	12.8	109.5	20	74	25	Steel Ni	In stock
THS626-317-4018-HRC	31.7	40	18	12.8	118.5	25	78	25	Steel NI	In stock
THS626-317-50175	31.7	50	17.5	12.8	120.5	25	80	25	Steel Ni	In stock
THS626-317-603035	31.7	60	30	12.8	145	35	94.5	25	Steel Ni	In stock
THS626-317-603035-HRC	31.7	60	30	12.8	140.5	35	90	25	Steel Ni	In stock
THS626-317-70-HRC	31.7	70	35	12.8	165	50	106.5	25	Steel Ni	In stock
THS626-34-40	34	40	16	16	102	20	65	20	Steel Ni	-
THS626-35-40	35	40	16	13	106	20	66	20	Steel Ni	In stock
THS626-35-50	35	50	17.5	13	118.5	25	73.5	20	Steel Ni	In stock
THS626-35-603035	35	60	30	13	144	35	89	20	Steel NI	-
THS626-35-603035	35	70	35	13	165	50	102	20	Steel Ni	In stock
THS626-40-50175	40	50	17.5	16	122	25	77	20	Steel Ni	In stock
THS626-50175-5025	50	50	17.5	25	130	25	80	25	Steel Ni	In stock
THS626-50175-603035	50	60	30	17.5	155	35	95	25	Steel Ni	-
THS626-50175-7035	50	70	35	17.5	180	50	111	25	Steel Ni	In stock
THS626-6028-603035-HRC	60	60	30	28	171	35	101	35	Steel Ni	In stock
THS626-603030-70	60	70	35	30	187	50	112	30	Steel Ni	In stock

THS626-603035-70-HRC	60	70	35	30	200	50	120	35	Steel Ni	In stock
THS626-70-70	70	70	35	35	222	50	132	50	Steel Ni	In stock

Legend

Alu- Aluminum
Steel Ni - Steel nickel coated
SST- Stainless

16.11.2026 VaP